AIRTECT

Plastic Leak Alarm System

FOCUS ON PREVENTION

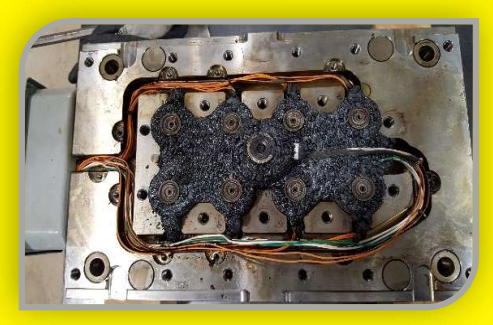

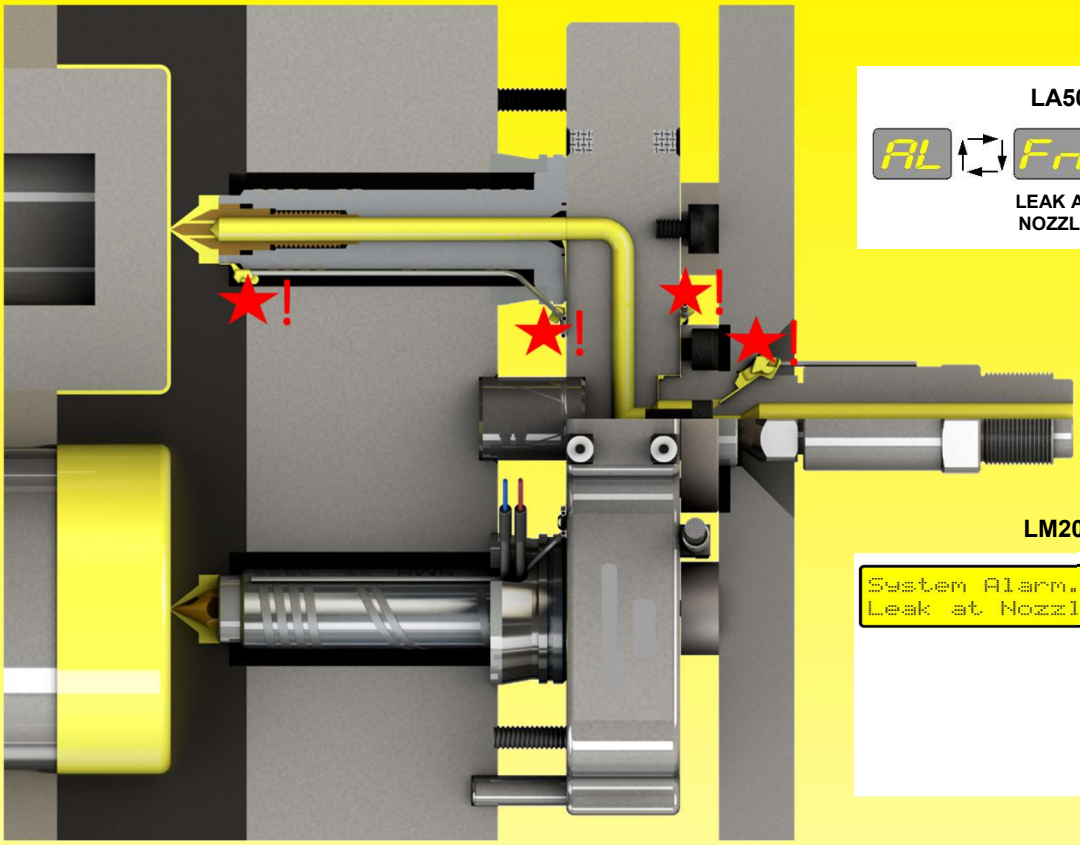

LA500 ALARM DISPLAYS

LM2050 ALARM DISPLAYS

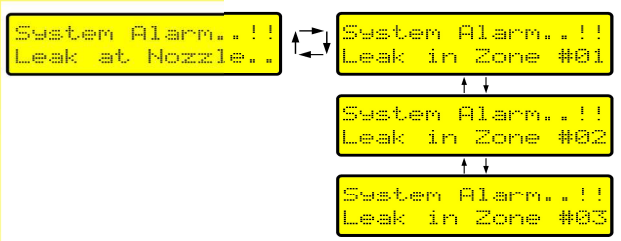

- Reduce the problem of Plastic Leak Damage at the IMM Injection Nozzle or inside a Hot Runner System with an AIRTECT Plastic Leak Detection Solution.
- AIRTECT Plastic Leak Detection Solutions are used worldwide by many companies especially in Automotive, Packaging and Medical Device manufacturing.
- AIRTECT Plastic Leak Detection Solutions are supplied worldwide by a network of distributors.

Plastic Leak Detection Solutions

AIRTECT

Plastic Leak Alarm System

Full range of NOZZLE and HOT RUNNER Leak Detection Modules

NOZZLE AND BARREL PROTECTION

'NOZZLE' LEAK DETECTION MODULES LA500, LA502 and LM2050

Work as Single or Dual (2K) IMM Nozzle Leak Detectors + Control/Display/Relay Interlock Modules for 'STANDARD' and 'MODULAR' Leak Detection Manifolds

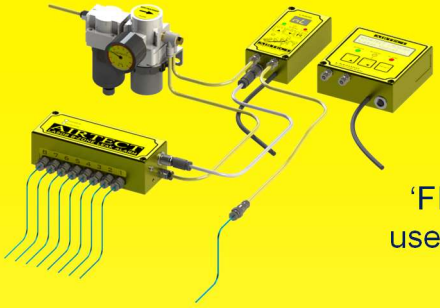

NOZZLE and HOT RUNNER MOULD PROTECTION

'FIXED' and 'MODULAR' LEAK DETECTION MANIFOLDS

'FIXED' and 'MODULAR' Multi-Zone Leak Detection Manifolds are used with either an LA500, LA502 or LM2050 Control/Display / Relay Interlock Module

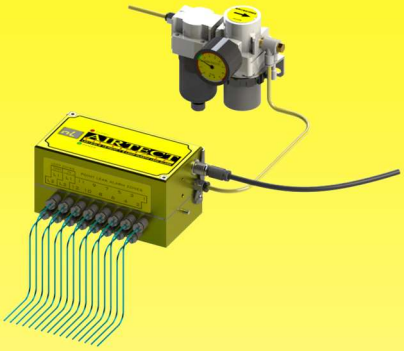

HOT RUNNER MOULD PROTECTION

'FIXED' and 'MODULAR' STAND-ALONE LEAK DETECTION MANIFOLDS

'STAND-ALONE' Multi-Zone Leak Detection Manifolds have an integral Control/Display / Relay Interlock Module

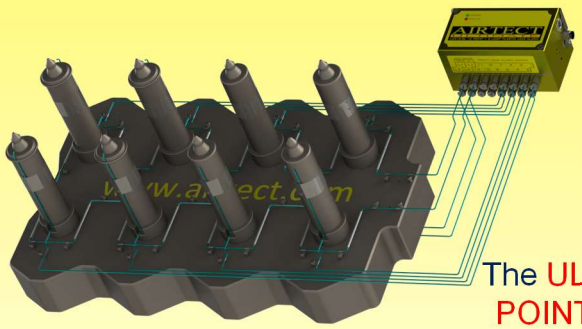

HOT RUNNER MOULD PROTECTION

'ULTIMATE'
'FIXED' and 'MODULAR' STAND-ALONE LEAK DETECTION MANIFOLDS

The ULTIMATE range of Leak Detection Manifolds have both POINT and CLOSED LOOP Leak Detection Zones and are available as 'Stand-Alone' units only.

Detect Your NOZZLE and HOT RUNNER Leaks Early!

DESIGNED AND MANUFACTURED BY:

REPRESENTED BY:

CyTec UK sales@cytec-uk.com

see www.airtect.com/distributors